LONG SEAMS

COURSE	ORIENTATION
1(TOP)	0°
2	180°
3	0°

*VERT – TOP TO BOTTOM

*NOTE: ALL ELEVATIONS ARE PULLED FROM WELD SEAM FOR EASE OF FABRICATION

Ship loose items:
(2 PCs) Swing gate (A71-24 (GALV.))
(2 PCs) Ladders w/ Hardware
(2 PCs.) Handrail w/ Hardware
(2 PCs.) Platform w/ Hardware
(1 PC.) Rest Platform w/ Hardware
(2 PCs.) Rest platform Handrail w/ Hardware

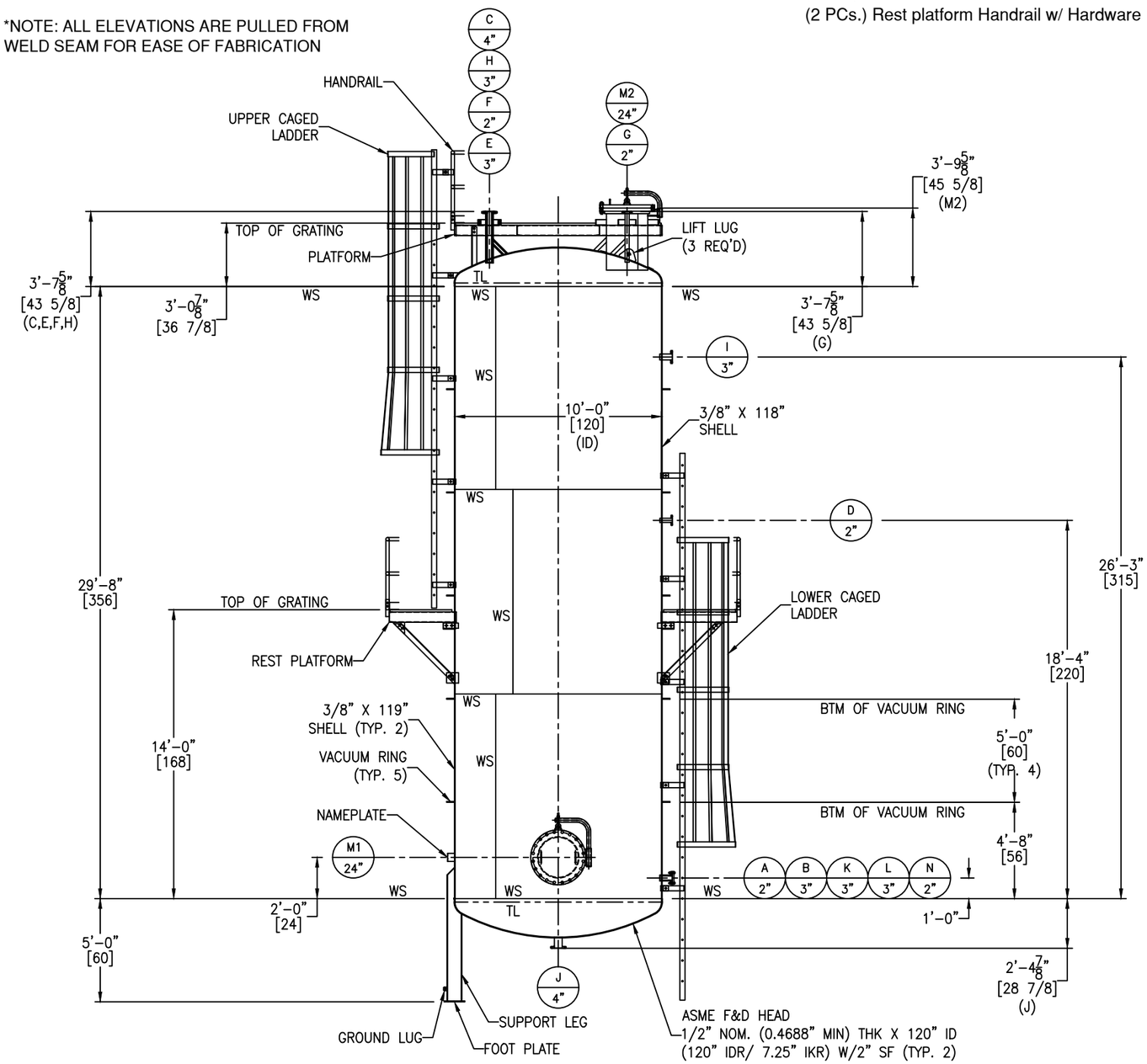

FC-38 GT-90

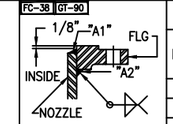

FIGURE NO. 1

FC-38 GT-90

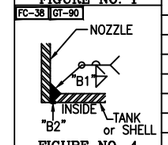

FIGURE NO. 4

FC-38 GT-90

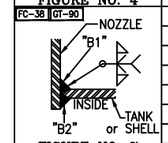

FIGURE NO. 7

FC-38 GT-90

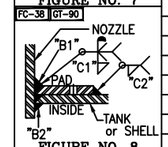

FIGURE NO. 8

FC-38 SA-37

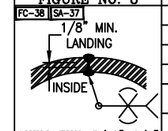

SHELL THK. 5/16"-3/4"
FIGURE NO. 10

FC-38 SA-37

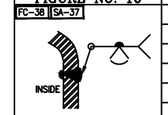

FOR HEADS
FIGURE NO. 11

NOZZLE SCHEDULE

MARK	SERVICE	SIZE	RATING	TYPE / STYLE	NECK SCHED.	PROJECTION EXT. (E)	PROJECTION INT. (MIN.)	WELD FIGURE	REPAD SIZE (WIDTH X THK.)	WELD SIZE "A1"	"A2"	"B1"	"B2"	"C1"	"C2"
A	SAMPLE	2"	150#	RFSO	40S	6"	1"	1,7	–	3/16	1/4	3/16	1/8	–	–
B	SPARE	3"	150#	RFSO W/BLIND	40S	6"	1"	1,7	–	1/4	5/16	1/4	1/8	–	–
C	LEVEL TRANSMITTER RADAR	4"	150#	RFSO	80S	SEE DWG	1"	1,7	–	1/4	3/8	3/8	1/8	–	–
D	CHILLED AQUA INLET	2"	150#	RFSO	40S	6"	1"	1,7	–	3/16	1/4	3/16	1/8	–	–
E	VAPOR RETURN	3"	150#	RFSO	40S	SEE DWG	1"	1,7	–	1/4	5/16	1/4	1/8	–	–
F	RELIEF	2"	150#	RFSO	40S	SEE DWG	1"	1,7	–	3/16	1/4	3/16	1/8	–	–
G	AQUA INLET FILL	2"	150#	RFSO	40S	SEE DWG	1"	1,7	–	3/16	1/4	3/16	1/8	–	–
H	PRESSURE	3"	150#	RFSO	40S	SEE DWG	1"	1,7	–	1/4	5/16	5/16	1/8	–	–
I	LEVEL	3"	150#	RFSO	40S	6"	1"	1,7	–	1/4	5/16	1/4	3/16	–	–
J	AQUA OUTLET DISCHARGE	4"	150#	RFSO	80S	SEE DWG	–	1,4	–	1/4	3/8	3/8	1/8	–	–
K	SPARE	3"	150#	RFSO W/BLIND	40S	6"	1"	1,7	–	1/4	5/16	1/4	1/8	–	–
L	LEVEL	3"	150#	RFSO	40S	6"	1"	1,7	–	1/4	5/16	1/4	1/8	–	–
M1	SHELL MANWAY	24"	150#	RFSO W/DAVIT	3/8"	8"	1"	1,8	4 1/2" X 3/8"	1/4	9/16	3/8	1/8	3/8	1/4
M2	ROOF MANWAY	24"	150#	RFSO W/DAVIT	3/8"	SEE DWG	1"	1,8	4 1/2" X 3/8"	1/4	9/16	3/8	1/8	3/8	5/16
N	TEMPERATURE	2"	150#	RFSO	40S	6"	1"	1,7	–	3/16	1/4	3/16	1/8	–	–

MATERIALS OF CONSTRUCTION

	VESSEL
SHELL	SA516-70
HEADS	SA516-70
RIM ANGLE	–
NOZZLE NECKS	SA53-B ERW
NOZZLE FLANGES	SA105
MANWAY NECKS	SA516-70
MANWAY FLANGES	SA105
GASKETS	NEOPRENE
BOLTS/STUDS	SA193-B7 (ZINC PLATED)
NUTS	SA194-2H (ZINC PLATED)
REPADS	SA36
COUPLINGS	–
SUPPORTS/HOLD DOWNS	SA53-B ERW & SA36
LIFTING LUGS	SA36
VACUUM RINGS	SA36
INSULATION RINGS	–
GROUND LUG	SA36
BAFFLE	–
LADDER	SA36
TANK CLIPS (LADDER)	SA36
HANDRAIL	SA500
HANDRAIL CLIPS	SA36
PLATFORM	SA36
PLATFORM SUPPORT	SA36
DIPTUBE SUPPORT	–
JACKET SHELL	–
JACKET HEADS	–
JACKET NOZZLE NECKS	–
JACKET NOZZLE FLANGES	–

DESIGN DATA

	VESSEL
DESIGN AND FAB. CODE	ASME
CERT. STAMP REQ'D.	YES
DESIGN PRESSURE	30 PSIG/FV
DESIGN TEMPERATURE	120°F
MIN. DESIGN METAL TEMP.	-20° F @ 30 PSIG
OPERATING PRESSURE	28 PSIG/FV
OPERATING TEMPERATURE	50°-68° F
JOINT EFFICIENCY HEADS	0.70
JOINT EFFICIENCY SHELL	0.70
CORROSION ALLOWANCE	1/16" (FOR SHELL & HEADS ONLY)
SPECIFIC GRAVITY	0.899
EARTHQUAKE ZONE	Ss = (0.100) S1 = (0.044)
WIND LOAD	115 MPH
STRESS RELIEF	NOT REQ'D
RADIOGRAPHIC EXAM	NOT REQ'D
DYE PENETRANT EXAM	NOT REQ'D
MAGNETIC PARTICLE EXAM	NOT REQ'D
HYDROSTATIC TEST	–
PNEUMATIC TEST	45 PSIG / GAUGE #17
JKT DESIGN AND FAB. CODE	–
JKT CERT. STAMP REQ'D.	–
JKT DESIGN PRESSURE	–
JKT DESIGN TEMPERATURE	–
JKT MIN. DESIGN METAL TEMP.	–
JKT OPERATING PRESSURE	–
JKT OPERATING TEMPERATURE	–
JKT JOINT EFFICIENCY HEADS	–
JKT JOINT EFFICIENCY SHELL	–
JKT HYDRO TEST	–

VESSEL FINISH

INTERIOR WELD TREATMENT:	SAV TANK STANDARD
EXTERIOR WELD TREATMENT:	SAV TANK STANDARD
SAV TANK FINISHING STANDARD:	N/A
INSULATION:	N/A
PAINTING:	SEE NOTE 6
GALVANIZING	SEE NOTE 7

VESSEL CAPACITY AND WEIGHTS

OPERATING CAPACITY	15,000 GAL.
FULL CAPACITY	18,800 GAL.
EMPTY SHIPPING WEIGHT W/O ACCESSORIES	22,900 LBS.
WEIGHT FULL OF WATER	182,400 LBS.
WEIGHT FULL OF PRODUCT	166,500 LBS.
WEIGHT OF ACCESSORIES	3,600 LBS.

ASME SECT. VIII, DIV. 1
2023 EDITION

ENG. _____ DATE: _____
Q.C. _____ DATE: _____
A.I. _____ DATE: _____

GENERAL NOTES

1.) COVER ALL FLANGES, OPENINGS & MACHINED SURFACES PRIOR TO SHIPMENT UNLESS OTHERWISE NOTED.
2.) BOLT HOLES TO STRADDLE 0° & 180° UNLESS OTHERWISE NOTED.
3.) REPADS TO HAVE (1) ø1/4" NPT TELL-TALE HOLES FOR PNEUMATIC TESTING AT 2 PSIG FOR PRESSURE RETAINING PARTS. ALL OTHER REPADS TO HAVE (1) ø1/4" WEEP HOLE AT LOWEST POINT ON PAD.
4.) ASME CODE VESSELS TO BE IN ACCORDANCE WITH UG-80 & UG-81. TOLERANCES: +/- 1/8" FOR DIMENSIONS AND +/- 2 DEGREES FOR ORIENTATIONS.
5.) ASME MATERIALS TO CONFORM TO THE FOLLOWING: FLANGES – B16.5, FITTINGS – B16.9 & COUPLINGS – B16.11.
6.) PAINTING – EXTERIOR WILL BE SANDBLASTED AND PAINTED (1) COAT SHERWIN WILLIAMS ZINC CLAD II @ 4-5 MILS DFT; (1) COAT SHERWIN WILLIAMS MACROPOXY 646 APPLIED 5-7 MILS DFT; (1) COAT SHERWIN WILLIAMS ACROLON 218 TOP COAT @ 3-4 MILS DFT
7.) GALVANIZING – HANDRAILS, LADDERS & PLATFORMS TO BE HOT DIPPED GALVANIZED

REVISIONS

REV	D.BY	C.BY	DATE	DESCRIPTION
3	AD	–	5/14/25	AS BUILT
2	AD	–	4/22/24	CERTIFIED
1	RS	AD	3/12/24	APPROVAL REV 1
0	AD	RS	2/5/24	APPROVAL

Savannah Tank & Equipment Corp.
1517 Telfair Road, Savannah, GA 31415
(912) 233-8902

DRAWN BY: AD
CHK'D BY: RS
APPROVED BY: NP
SCALE: 1/4" = 1'-0"

BAKELITE CHEMICALS LLC
AQUEOUS AMMONIA TANK
EQUIP. # S-19
CUST. PO #5522460061

DRAWING NO.: 003-24-1 SHT 1 OF 11 REV. SET 3

LONG SEAMS

COURSE	ORIENTATION
1(TOP)	0°
2	180°
3	0°

*VERT – TOP TO BOTTOM

Ship loose items:
(2 PCs.) Swing gate (A71-24 (GALV.))
(2 PCs.) Ladders w/ Hardware
(2 PCs.) Handrail w/ Hardware
(2 PCs.) Platform w/ Hardware
(1 PC.) Rest Platform w/ Hardware
(2 PCs.) Rest platform Handrail w/ Hardware

SEE SHEET 4 FOR PLATFORM DETAILS

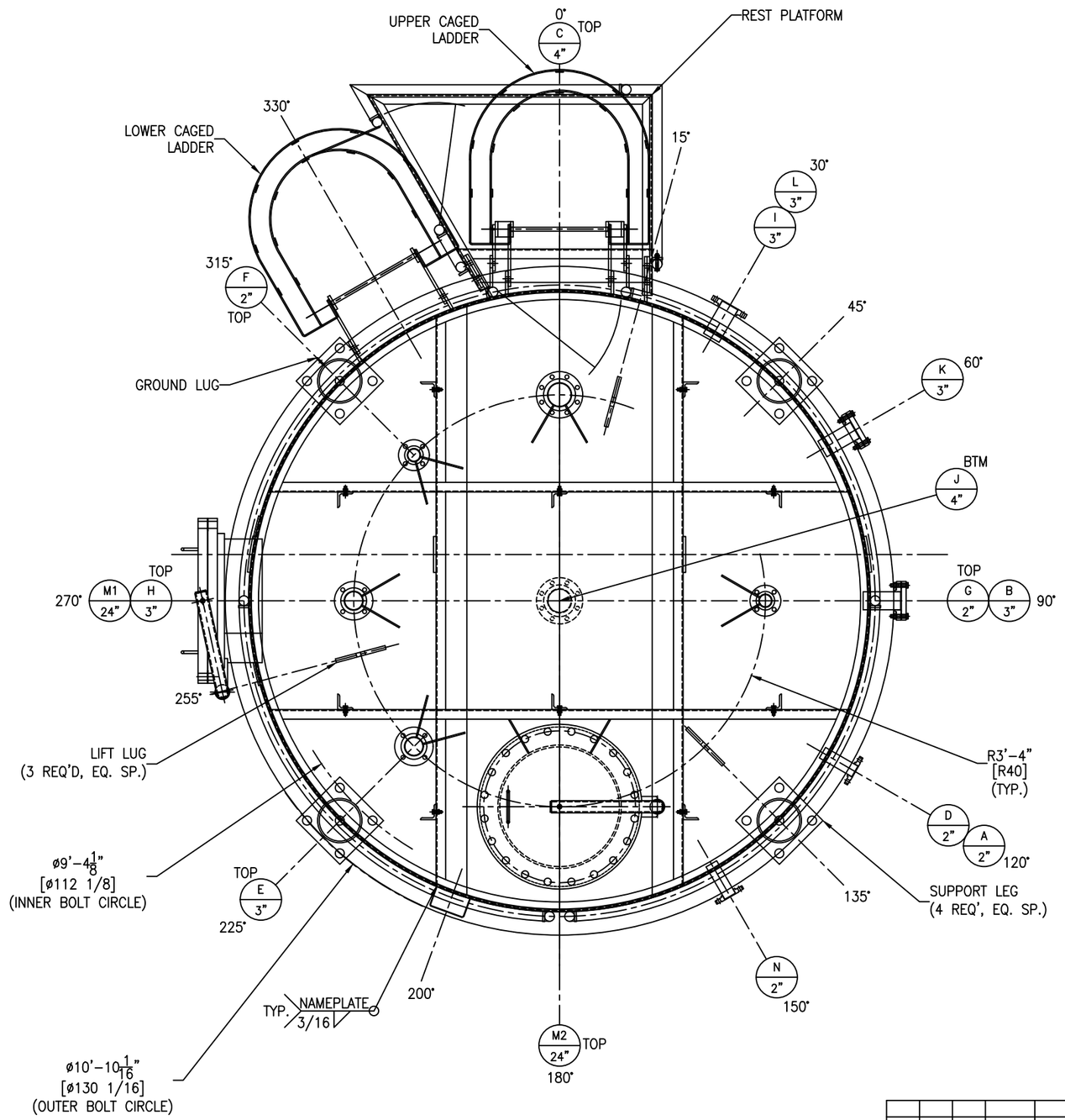

REV	D.BY	C.BY	DATE	DESCRIPTION
3	AD	–	5/14/25	AS BUILT
2	AD	–	4/22/24	CERTIFIED
1	RS	AD	3/12/24	APPROVAL REV 1
0	AD	RS	2/5/24	APPROVAL

△1 REVISIONS

Savannah Tank & Equipment Corp.
1517 Telfair Road, Savannah, GA 31415
(912) 233-8902

DRAWN BY: AD
CHK'D BY: RS
APPROVED BY: NP
SCALE: 3/4" = 1'-0"

BAKELITE CHEMICALS LLC
AQUEOUS AMMONIA TANK
EQUIP. # S-19
CUST. PO #5522460061

DRAWING NO.: 003-24-2 SHT 2 OF 11 REV. SET 3

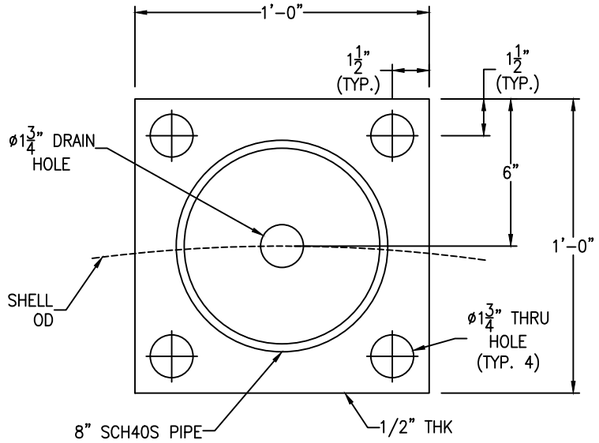

FOOT PLATE DETAIL

(4 REQ'D) SCALE: 3" = 1'-0"

FC-38

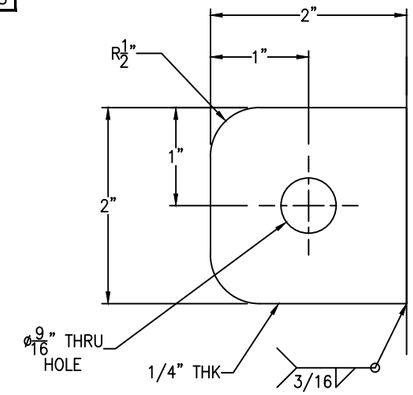

GROUND LUG IS LOCATED @315°

GROUND LUG DETAIL

SCALE: 1'-0" = 1'-0"

FC-38

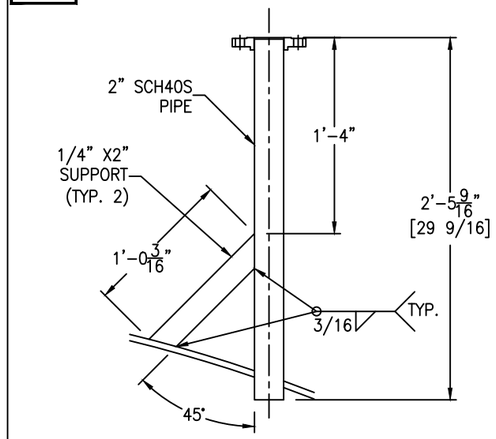

NOZ. G & F SUPPORT DETAIL

(2 REQ'D) SCALE: 1 1/2" = 1'-0"

FC-38

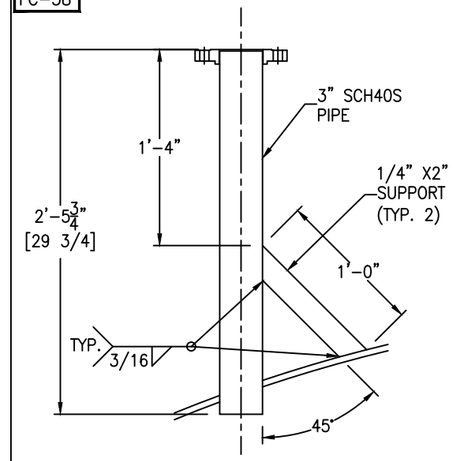

NOZ. E & H DETAIL

(2 REQ'D) SCALE: 1 1/2" = 1'-0"

FC-38

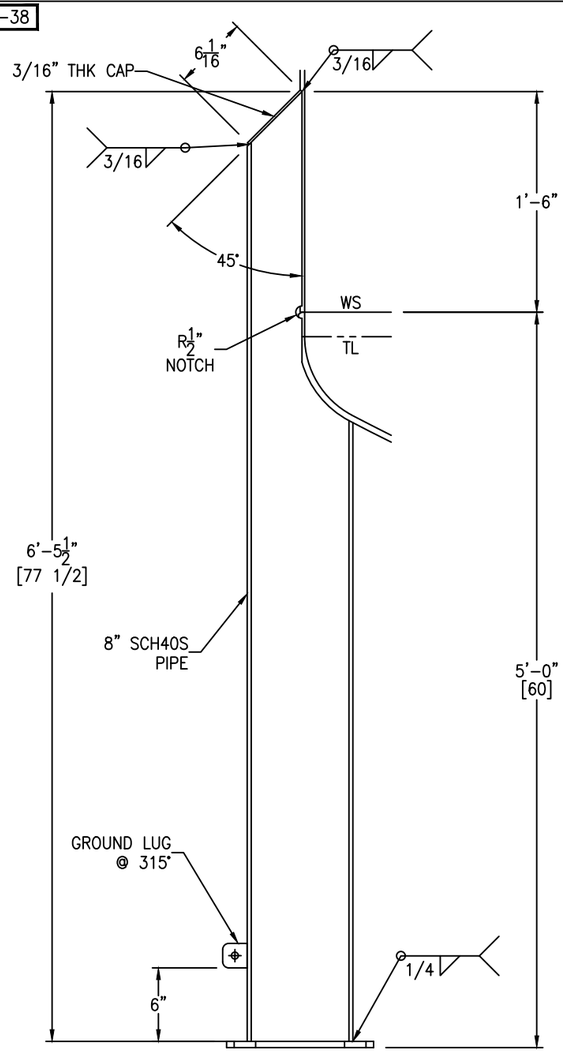

SUPPORT LEG DETAIL

(4 REQ'D) SCALE: 1 1/2" = 1'-0"

FC-38

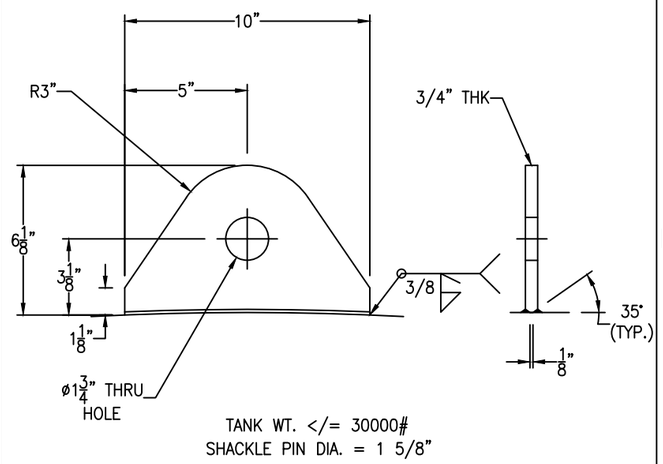

TANK WT. <= 30000#
SHACKLE PIN DIA. = 1 5/8"

LIFT LUG DETAIL

(3 REQ'D.) SCALE: 3" = 1'-0"

FC-38

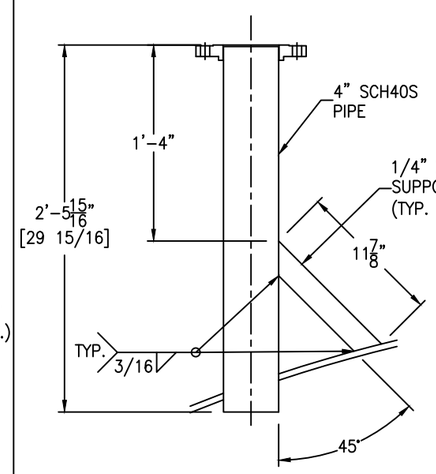

NOZZLE C SUPPORT DETAIL

SCALE: 1 1/2" = 1'-0"

FC-38

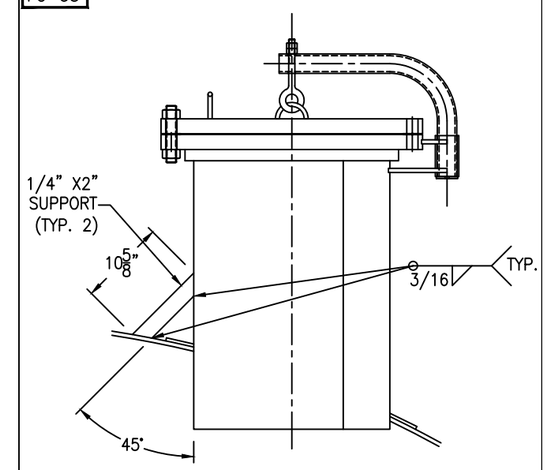

MANWAY M2 SUPPORT DETAIL

SCALE: 1" = 1'-0"

FC-38

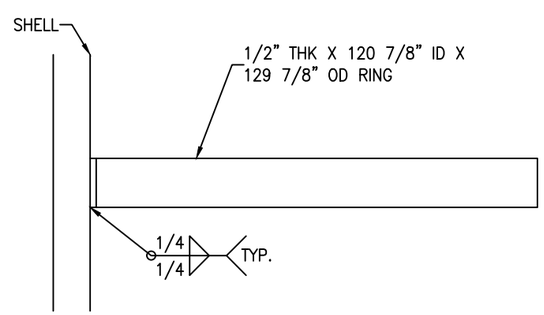

VACUUM RING DETAIL

(5 REQ'D) SCALE: 1'-0" = 1'-0"

Bolting for blinds

B,K: (4+4) 5/8"-11 NC x 3" HH BOLT
(4+4) 5/8"-11 NC HH NUT
(1+1) 3" 150# RING GASKET X 1/8" THK (NEOPRENE)

REV	D.BY	C.BY	DATE	DESCRIPTION
3	AD	–	5/14/25	AS BUILT
2	AD	–	4/22/24	CERTIFIED
1	RS	AD	3/12/24	APPROVAL REV 1
0	AD	RS	2/5/24	APPROVAL

⚠ REVISIONS

Savannah Tank & Equipment Corp.
1517 Telfair Road, Savannah, GA 31415
(912) 233-8902

DRAWN BY: AD
CHK'D BY: RS
APPROVED BY: NP
SCALE: 1/4" = 1'-0"

BAKELITE CHEMICALS LLC
AQUEOUS AMMONIA TANK
EQUIP. # S-19
CUST. PO #5522460061

DRAWING NO.: 003-24-3 SHT 3 OF 11 REV. SET 3

GM-73

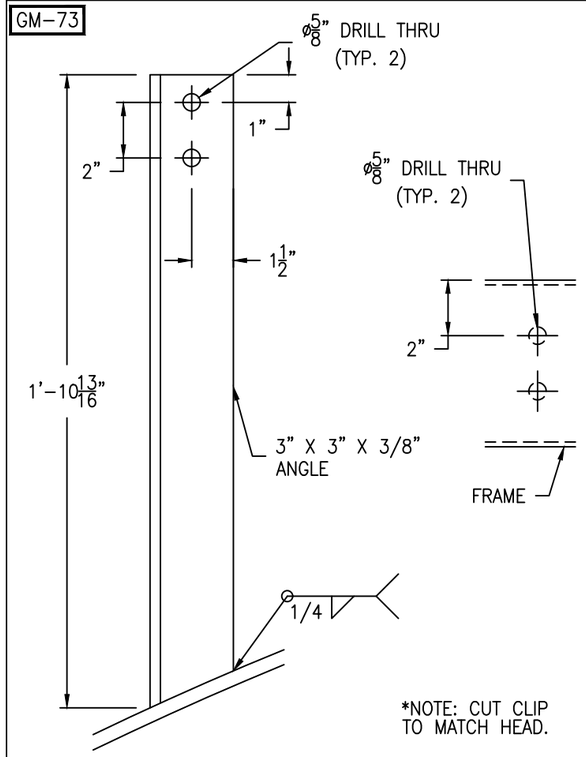

FRAME SUPPORT DETAIL

(10 REQ'D) SCALE: 3" = 1'-0"

GM-73

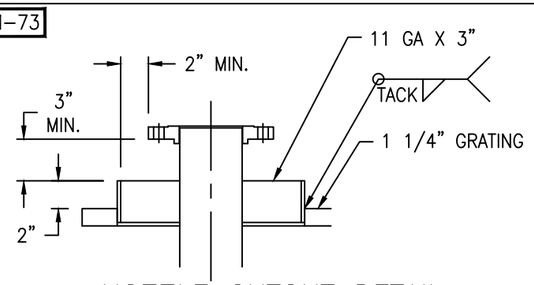

NOZZLE CUTOUT DETAIL

(6 REQ'D) SCALE: 1 1/2" = 1'-0"

GM-73

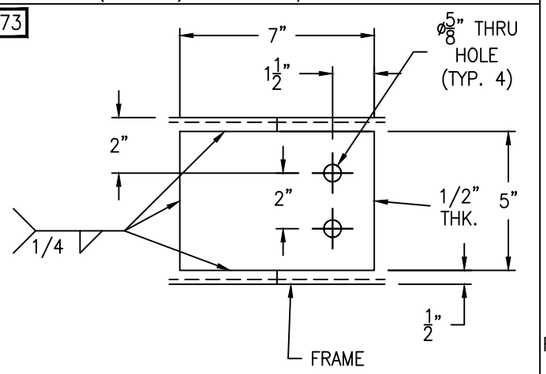

SPLIT PLATFORM 9" TOWARDS 0° FROM 90° & 270°.

FRAME SPLIT CONNECTION DETAIL

(4 REQ'D) SCALE: 3" = 1'-0"

GM-73

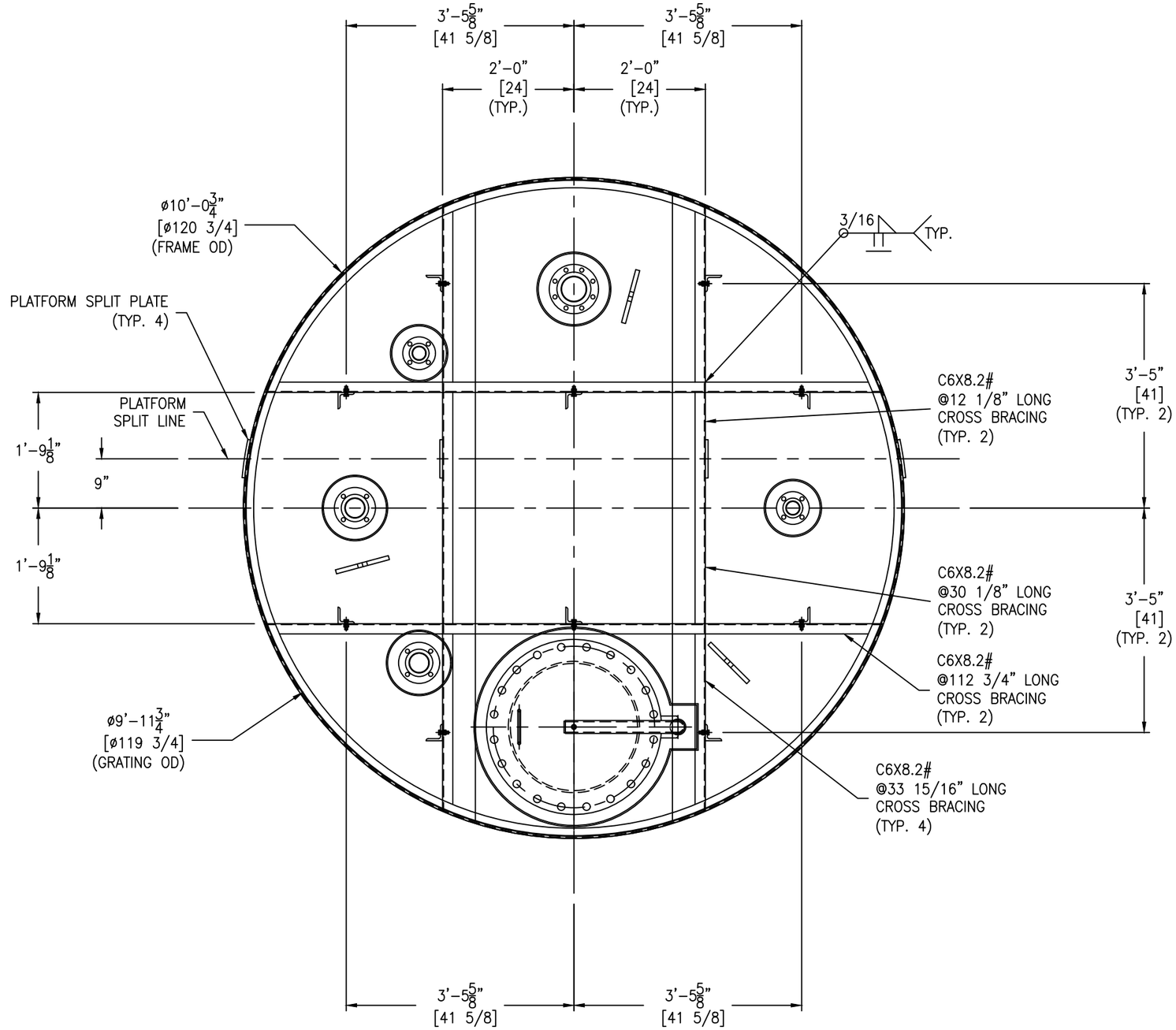

FRAME SUPPORT BOLTING:
(20) 1/2-13 NC X 2" HH BOLT - SA193-B7 (ZINC PLATED)
(20) 1/2-13 NC HH NUT - SA194-2H (ZIINC PLATED)

FRAME SPLIT BOLTING:
(8) 1/2-13 NC X 1 1/2" HH BOLT - SA193-B7 (ZINC PLATED)
(8) 1/2-13 NC HH NUT - SA194-2H (ZIINC PLATED)

PLATFORM TO BE HOT-DIPPED GALVANIZED

REV	D.BY	C.BY	DATE	DESCRIPTION
3	AD	-	5/14/25	AS BUILT
2	AD	-	4/22/24	CERTIFIED
1	RS	AD	3/12/24	APPROVAL REV 1
0	AD	RS	2/5/24	APPROVAL

1 REVISIONS

Savannah Tank & Equipment Corp.
1517 Telfair Road, Savannah, GA 31415
(912) 233-8902

DRAWN BY: AD
CHK'D BY: RS
APPROVED BY: NP
SCALE: 3/8" = 1'-0"

BAKELITE CHEMICALS LLC
AQUEOUS AMMONIA TANK
EQUIP. # S-19
CUST. PO #5522460061

DRAWING NO.: 003-24-4 SHT 4 OF 11 REV. SET 3

GM-73

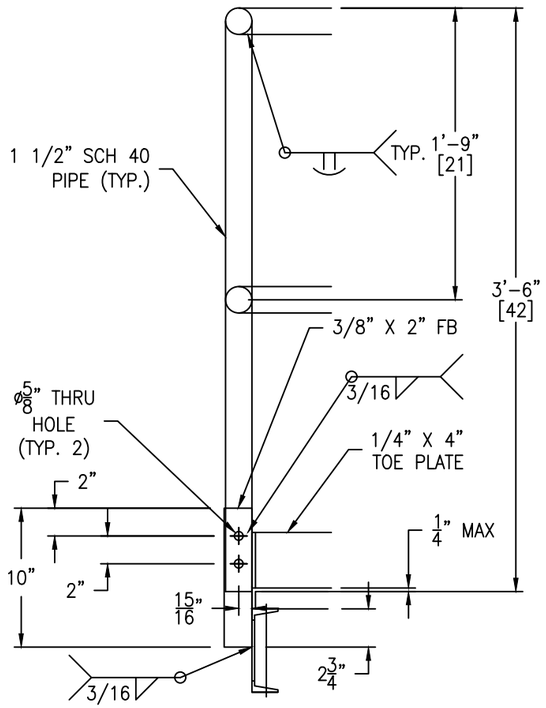

HANDRAIL DETAIL

(6 REQ'D) SCALE: 1 1/2" = 1'-0"

HANDRAIL BOLTING:
(12) 1/2-13 NC X 3" HH BOLT - SA193-B7 (ZINC PLATED)
(12) 1/2-13 NC HH NUT - SA194-2H (ZINC PLATED)

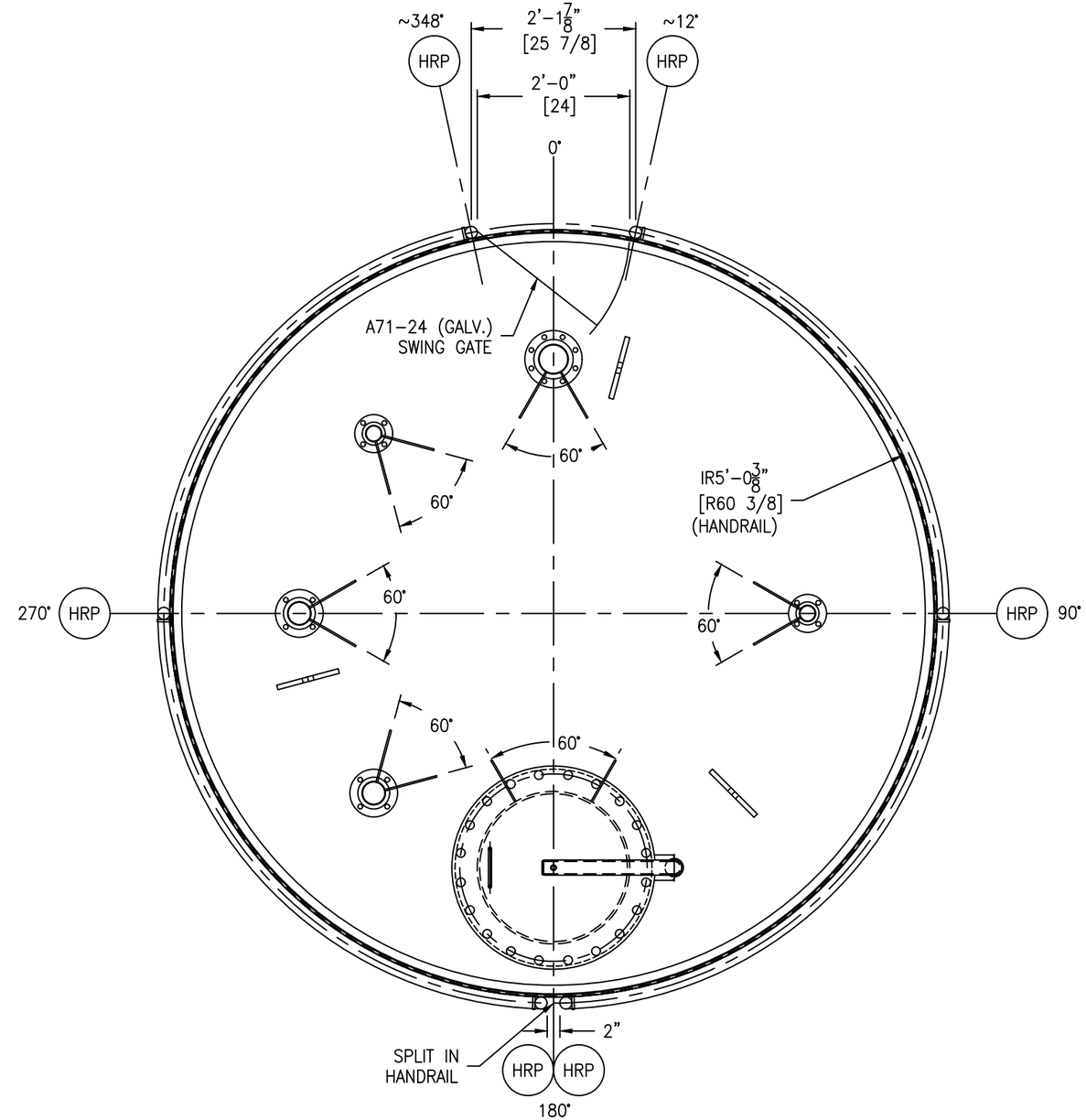

PLATFORM HANDRAIL DETAIL

SCALE: 3/4" = 1'-0"

HANDRAIL TO BE HOT-DIPPED GALVANIZED

REV	D.BY	C.BY	DATE	DESCRIPTION
3	AD	-	5/14/25	AS BUILT
2	AD	-	4/22/24	CERTIFIED
1	RS	AD	3/12/24	APPROVAL REV 1
0	AD	RS	2/5/24	APPROVAL

1 REVISIONS

Savannah Tank & Equipment Corp.
1517 Telfair Road, Savannah, GA 31415
(912) 233-8902

DRAWN BY: AD
CHK'D BY: RS
APPROVED BY: NP
SCALE: 3/8" = 1'-0"

BAKELITE CHEMICALS LLC
AQUEOUS AMMONIA TANK
EQUIP. # S-19
CUST. PO #5522460061

DRAWING NO.: 003-24-5 SHT 5 OF 11 REV. SET 3

LADDER CLIP BOLTING:
(10) 5/8-11 NC X 2" HH BOLT - SA193-B7 (ZINC PLATED)
(10) 5/8-11 NC HH NUT - SA194-2H (ZINC PLATED)

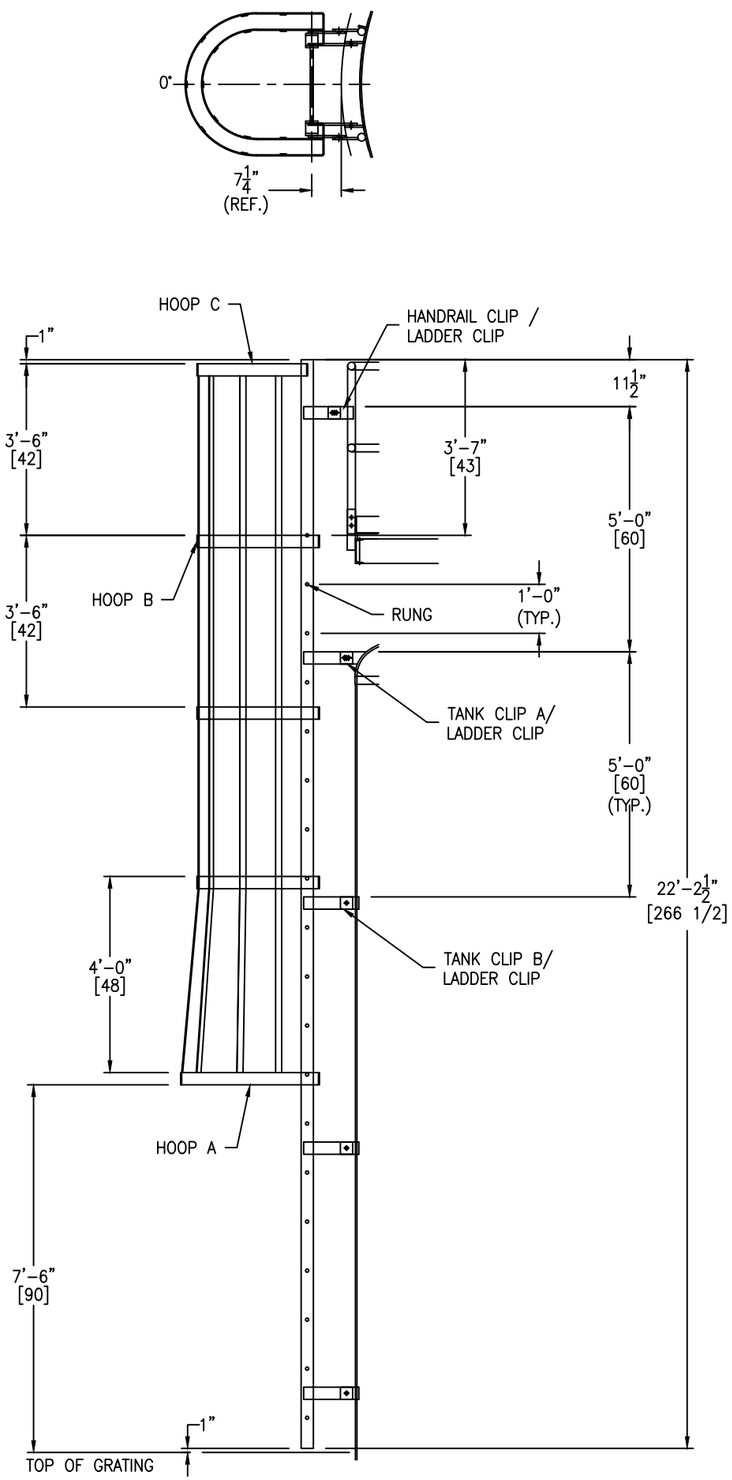

(1 REQ'D) SCALE: 1/2" = 1'-0"

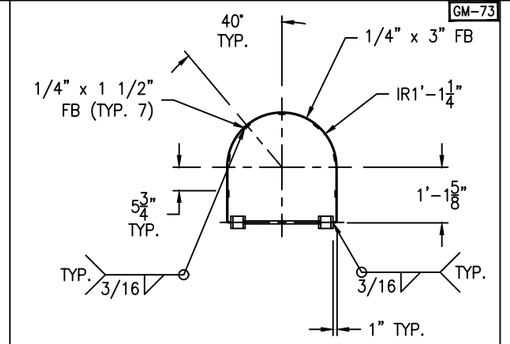

HOOP "C" DETAIL

(1 REQ'D) SCALE: 1/2" = 1'-0"

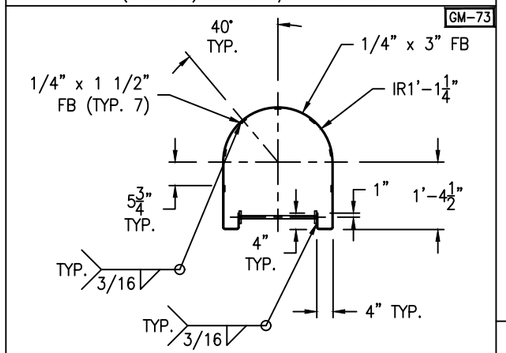

HOOP "B" DETAIL

(3 REQ'D) SCALE: 1/2" = 1'-0"

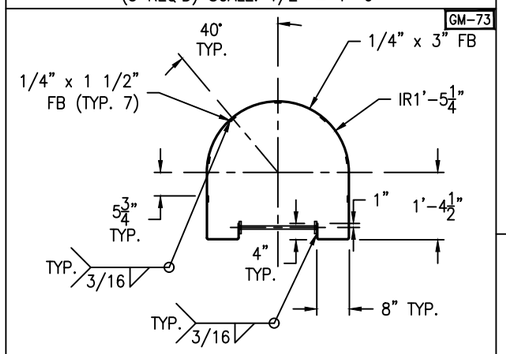

HOOP "A" DETAIL

(1 REQ'D) SCALE: 1/2" = 1'-0"

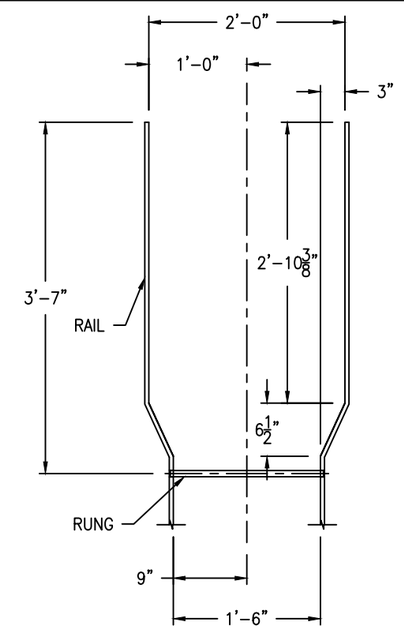

WALK-THRU DETAIL

SCALE: 1" = 1'-0"

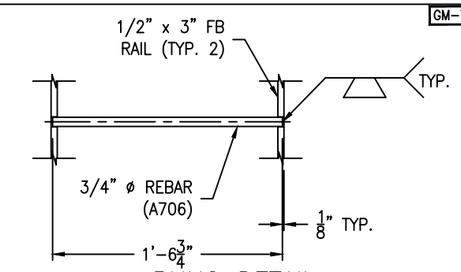

RUNG DETAIL

(19 REQ'D) SCALE: 1 1/2" = 1'-0"

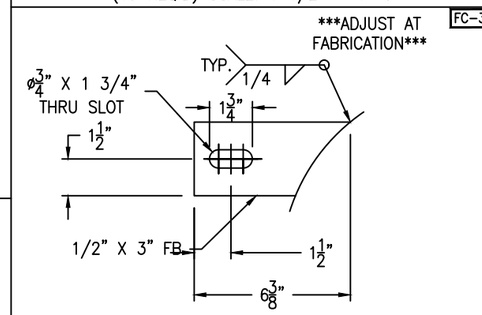

TANK CLIP A DETAIL

(2 REQ'D) SCALE: 3" = 1'-0"

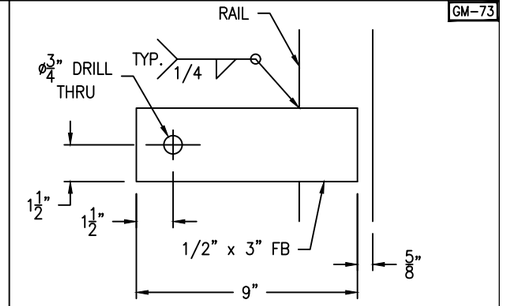

LADDER CLIP A DETAIL

(2 REQ'D) SCALE: 3" = 1'-0"

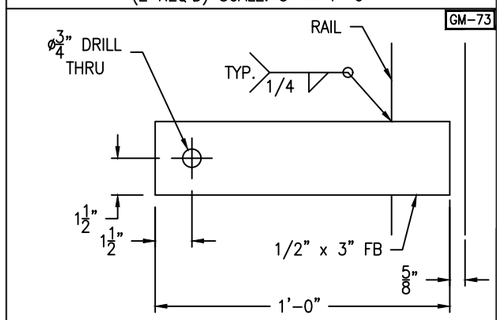

LADDER CLIP B DETAIL

(8 REQ'D) SCALE: 3" = 1'-0"

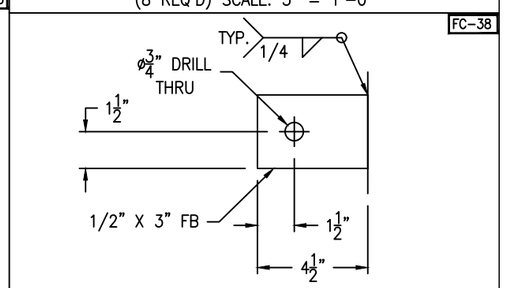

TANK CLIP B DETAIL

(6 REQ'D) SCALE: 3" = 1'-0"

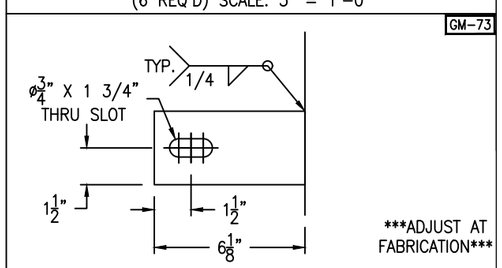

HANDRAIL CLIP DETAIL

(2 REQ'D) SCALE: 3" = 1'-0"

LADDER TO BE HOT-DIPPED GALVANIZED

REV	D.BY	C.BY	DATE	DESCRIPTION
3	AD	-	5/14/25	AS BUILT
2	AD	-	4/22/24	CERTIFIED
1	RS	AD	3/12/24	APPROVAL REV 1
0	AD	RS	2/5/24	APPROVAL

⚠ REVISIONS

Savannah Tank & Equipment Corp.
1517 Telfair Road, Savannah, GA 31415
(912) 233-8902

DRAWN BY: AD
CHK'D BY: RS
APPROVED BY: NP
SCALE: 1/4" = 1'-0"

BAKELITE CHEMICALS LLC
AQUEOUS AMMONIA TANK
EQUIP. # S-19
CUST. PO #5522460061

DRAWING NO.: 003-24-6 SHT 6 OF 11 REV. SET 3

LADDER CLIP BOLTING:
(10) 5/8-11 NC X 2" HH BOLT - SA193-B7 (ZINC PLATED)
(10) 5/8-11 NC HH NUT - SA194-2H (ZINC PLATED)

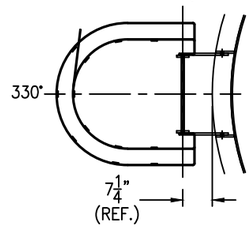

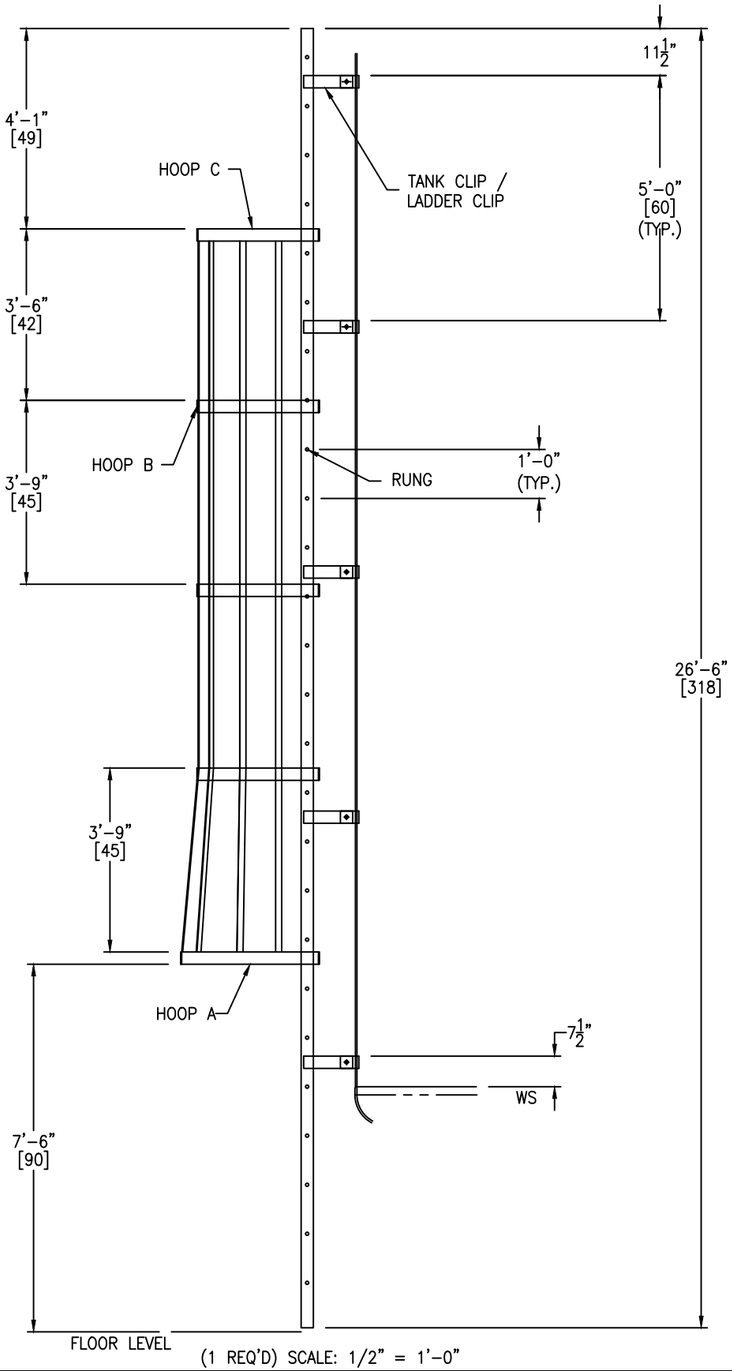

(1 REQ'D) SCALE: 1/2" = 1'-0"

GM-73

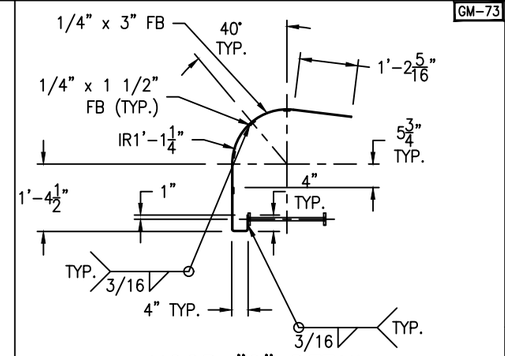

HOOP "C" DETAIL

(1 REQ'D) SCALE: 1/2" = 1'-0"

GM-73

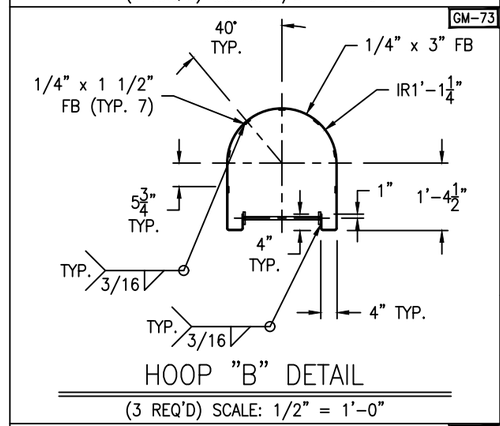

HOOP "B" DETAIL

(3 REQ'D) SCALE: 1/2" = 1'-0"

GM-73

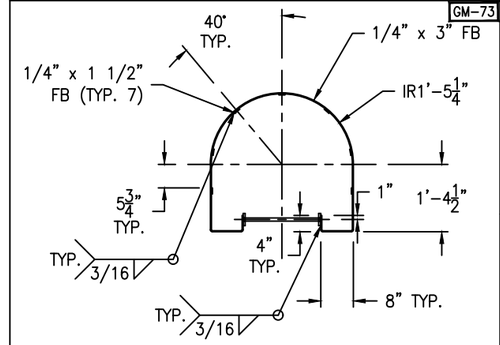

HOOP "A" DETAIL

(1 REQ'D) SCALE: 1/2" = 1'-0"

GM-73

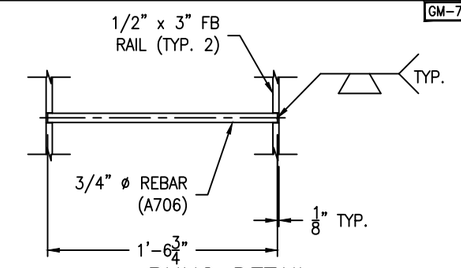

RUNG DETAIL

(26 REQ'D) SCALE: 1 1/2" = 1'-0"

GM-73

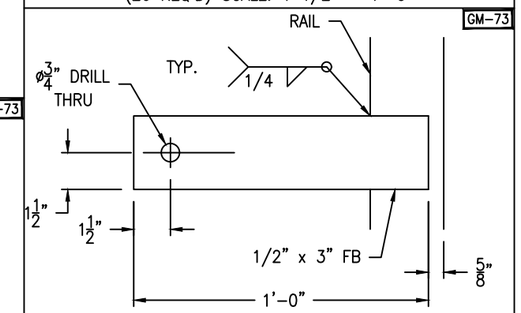

LADDER CLIP DETAIL

(10 REQ'D) SCALE: 3" = 1'-0"

FC-38

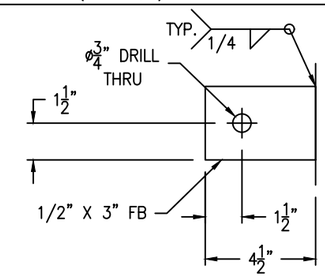

TANK CLIP DETAIL

(10 REQ'D) SCALE: 3" = 1'-0"

LADDER TO BE HOT-DIPPED GALVANIZED

REV	D.BY	C.BY	DATE	DESCRIPTION
3	AD	-	5/14/25	AS BUILT
2	AD	-	4/22/24	CERTIFIED
1	RS	AD	3/12/24	APPROVAL REV 1
0	-	-	-	APPROVAL

REVISIONS

Savannah Tank & Equipment Corp.
1517 Telfair Road, Savannah, GA 31415
(912) 233-8902

DRAWN BY: AD
CHK'D BY: RS
APPROVED BY: NP
SCALE: 1/4" = 1'-0"

BAKELITE CHEMICALS LLC
AQUEOUS AMMONIA TANK
EQUIP. # S-19
CUST. PO #5522460061

DRAWING NO.: 003-24-7 SHT 7 OF 11 REV. SET 3

GM-73

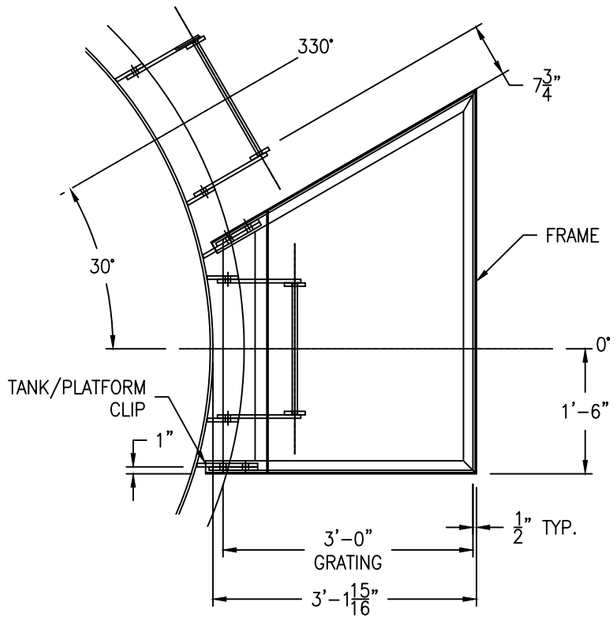

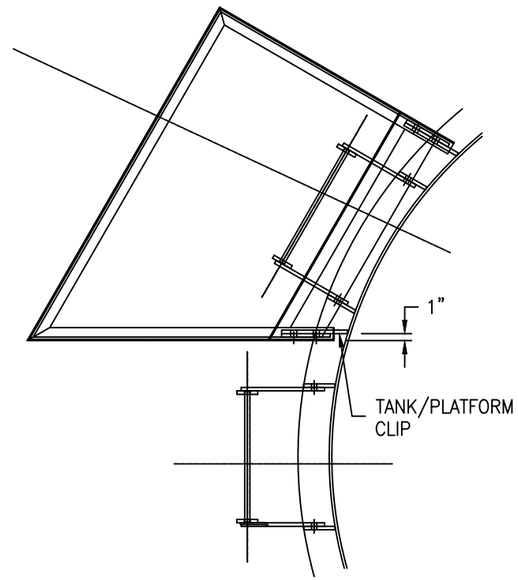

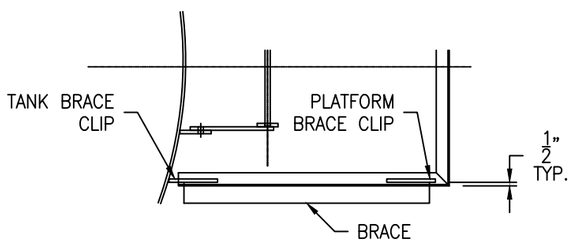

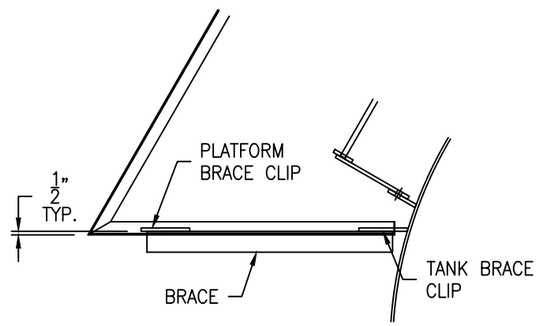

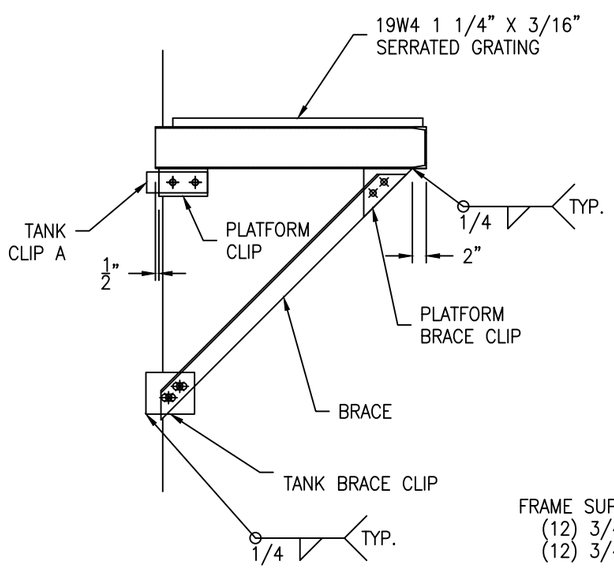

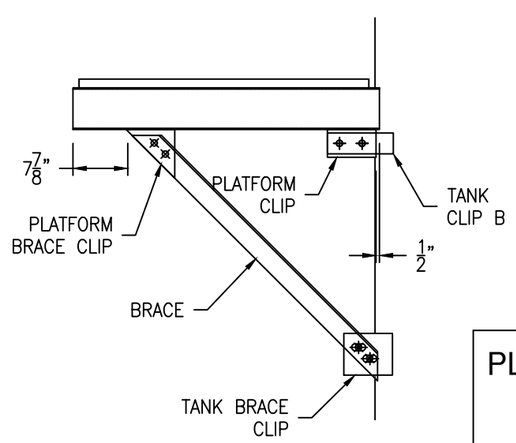

FRAME SUPPORT BOLTING:
(12) 3/4-10 NC X 2" HH BOLT - SA193-B7 (ZINC PLATED)
(12) 3/4-10 NC HH NUT - SA194-2H (ZINC PLATED)

SCALE: 3/4" = 1'-0"

GM-73

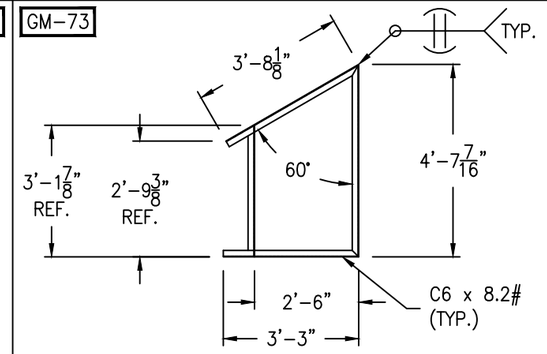

PLATFORM FRAME DETAIL

SCALE: 3/8" = 1'-0"

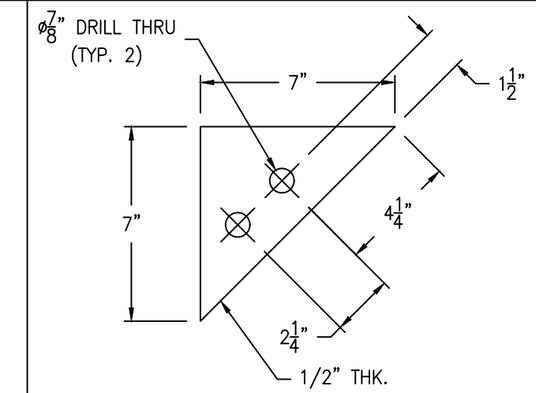

PLATFORM BRACE CLIP DETAIL

(2 REQ'D) SCALE: 3" = 1'-0"

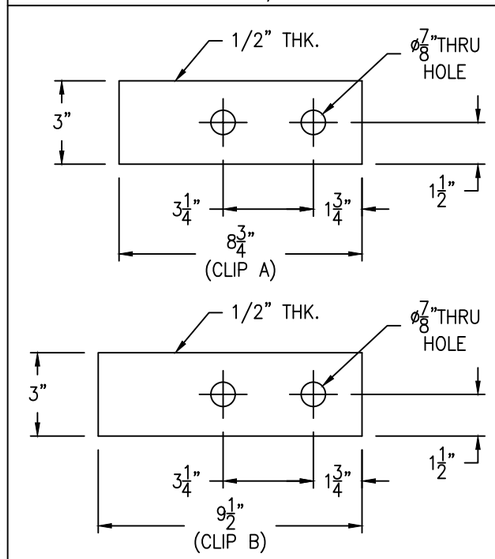

TANK CLIP DETAIL

(2 REQ'D) SCALE: 3" = 1'-0"

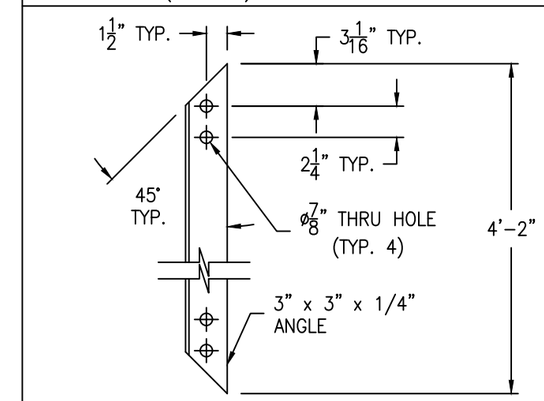

BRACE DETAIL

(2 REQ'D) SCALE: 1 1/2" = 1'-0"

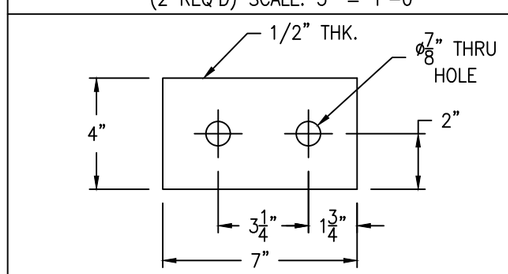

PLATFORM CLIP DETAIL

(2 REQ'D) SCALE: 3" = 1'-0"

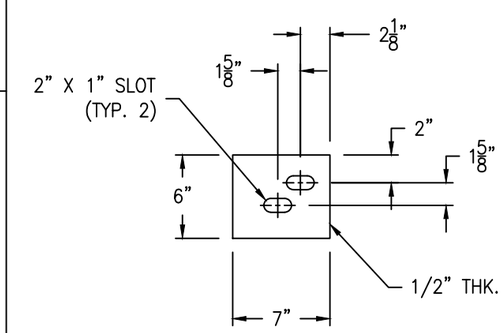

TANK BRACE CLIP DETAIL

(2 REQ'D) SCALE: 1 1/2" = 1'-0"

PLATFORM TO BE HOT-DIPPED GALVANIZED

REV	D.BY	C.BY	DATE	DESCRIPTION
3	AD	-	5/14/25	AS BUILT
2	AD	-	4/22/24	CERTIFIED
1	RS	AD	3/12/24	APPROVAL REV 1
0	-	-	-	APPROVAL

⚠1 REVISIONS

Savannah Tank & Equipment Corp.
1517 Telfair Road, Savannah, GA 31415
(912) 233-8902

DRAWN BY: AD
CHK'D BY: RS
APPROVED BY: NP
SCALE: 3/8" = 1'-0"

BAKELITE CHEMICALS LLC
AQUEOUS AMMONIA TANK
EQUIP. # S-19
CUST. PO #5522460061

DRAWING NO.: 003-24-8 SHT 8 OF 11 REV. SET 3

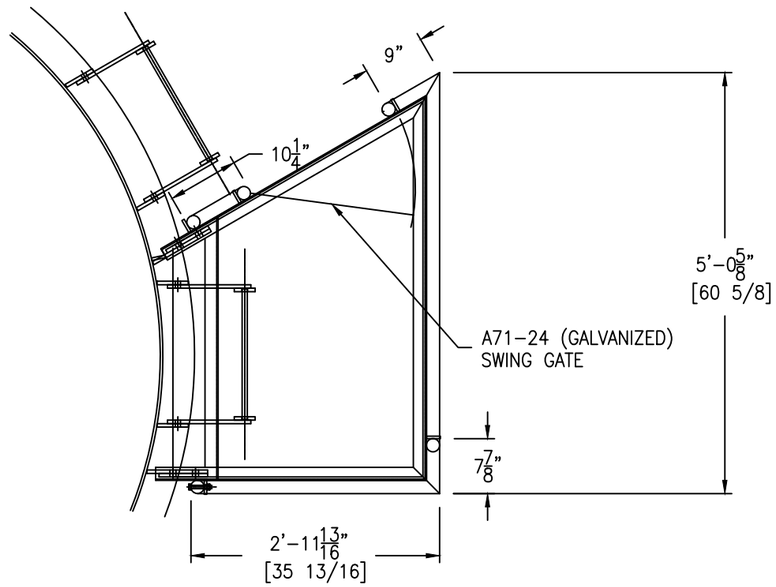

SCALE: 3/4" = 1'-0"

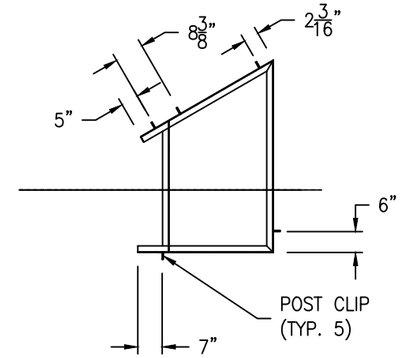

POST CLIP DETAIL

SCALE: 3/8" = 1'-0"

GM-73

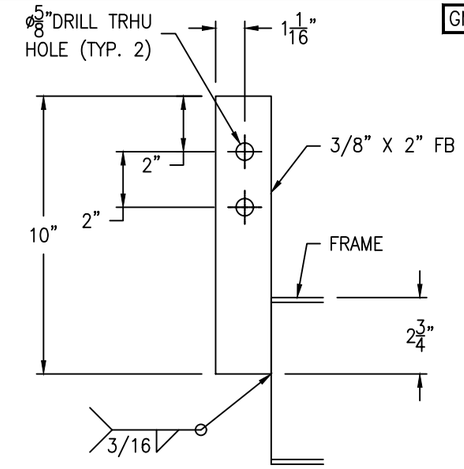

POST CLIP DETAIL

(5 REQ'D) SCALE: 3" = 1'-0"

GM-73

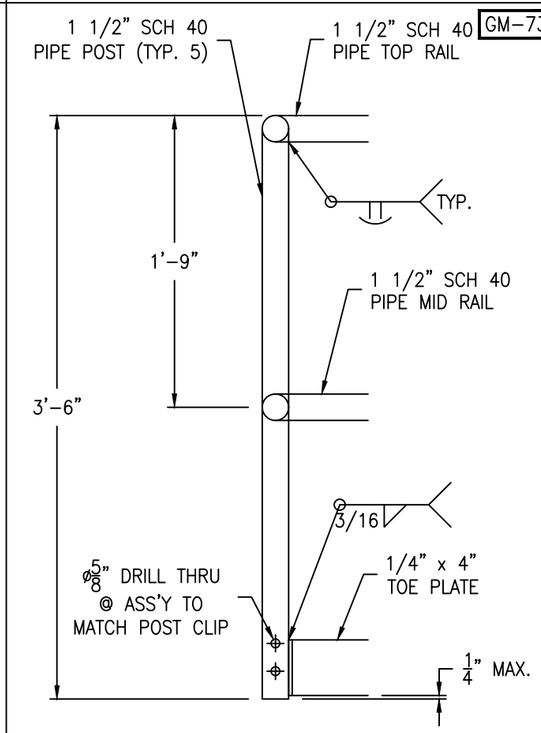

*NOTE: DRILL HOLES IN RAILS AND POSTS IF GALVANIZED.

HANDRAIL DETAIL

SCALE: 1 1/2" = 1'-0"

HANDRAIL BOLTING:
(10) 1/2-13 NC X 3" HH BOLT - SA193-B7 (ZINC PLATED)
(10) 1/2-13 NC HH NUT - SA194-2H (ZINC PLATED)

HANDRAILS TO BE HOT-DIPPED GALVANIZED

REV	D.BY	C.BY	DATE	DESCRIPTION
3	AD	-	5/14/25	AS BUILT
2	AD	-	4/22/24	CERTIFIED
1	RS	AD	3/12/24	APPROVAL REV 1
0	-	-	-	APPROVAL

1 REVISIONS

Savannah Tank & Equipment Corp.
1517 Telfair Road, Savannah, GA 31415
(912) 233-8902

DRAWN BY: AD
CHK'D BY: RS
APPROVED BY: NP
SCALE: 3/8" = 1'-0"

BAKELITE CHEMICALS LLC
AQUEOUS AMMONIA TANK
EQUIP. # S-19
CUST. PO #5522460061

DRAWING NO.: 003-24-9 SHT 9 OF 11 REV. SET 3

FC-38

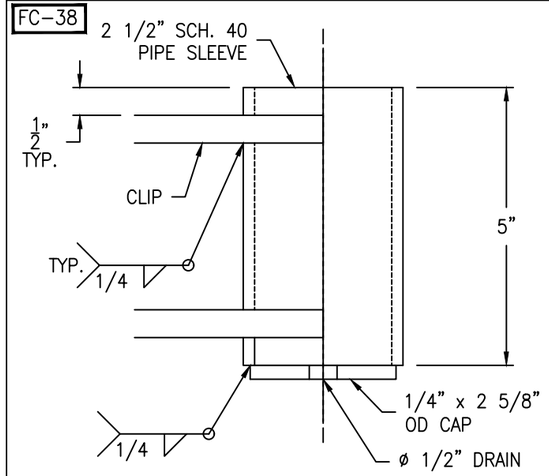

SLEEVE DETAIL

(1 REQ'D) SCALE: 6" = 1'-0"

FC-38

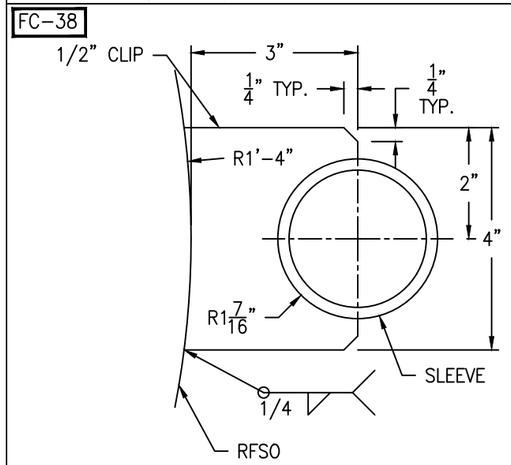

UPPER CLIP DETAIL

(1 REQ'D) SCALE: 6" = 1'-0"

FC-38

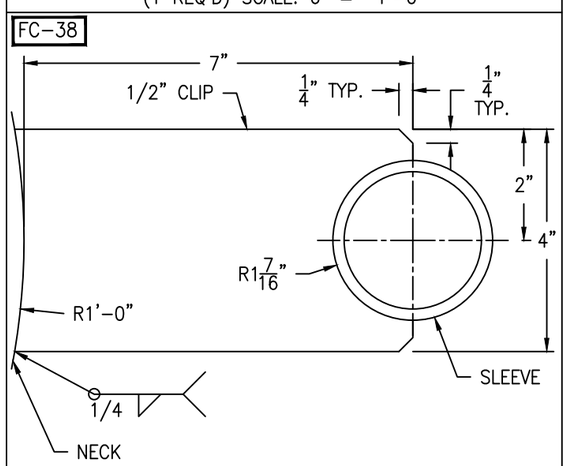

LOWER CLIP DETAIL

(1 REQ'D) SCALE: 6" = 1'-0"

FC-38

Bolting for blind
(20) 1 1/4-7 NC x 7" FULL THREADED STUD
(40) 1 1/4-7 NC HH NUT
(1) 24" 150# RING GASKET x 1/8" THK (NEOPRENE)

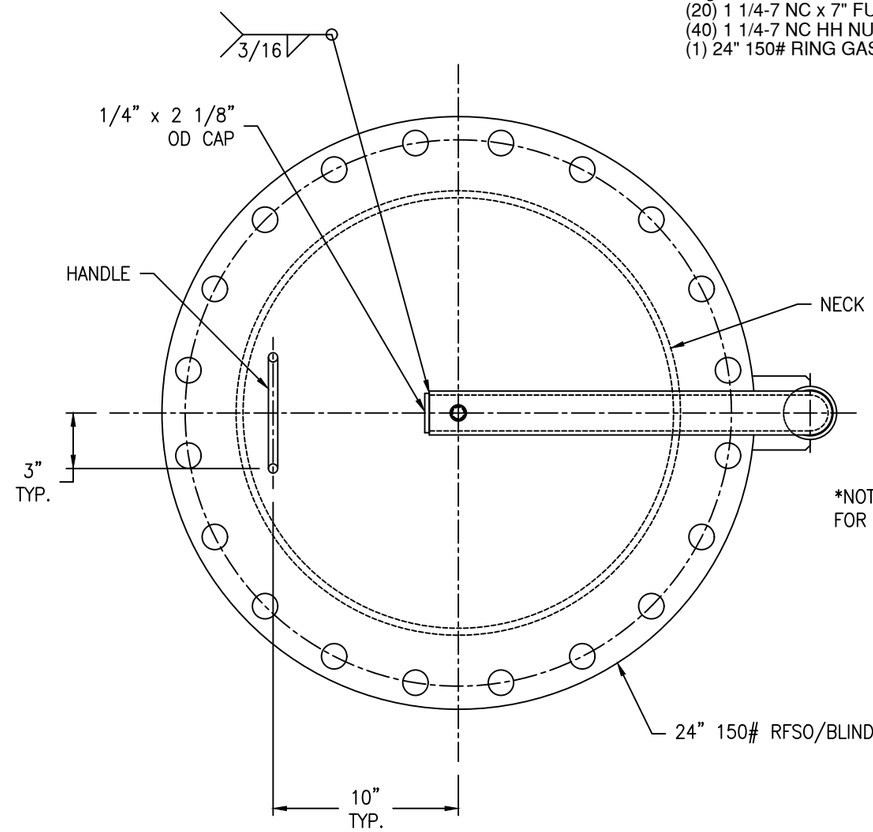

*NOTE: SEE VESSEL ORIENTATION FOR DAVIT LOCATION

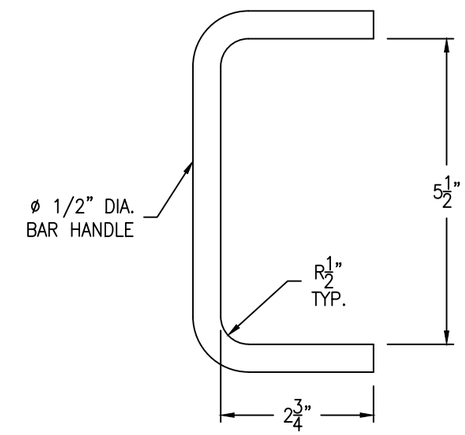

HANDLE DETAIL

(1 REQ'D) SCALE: 6" = 1'-0"

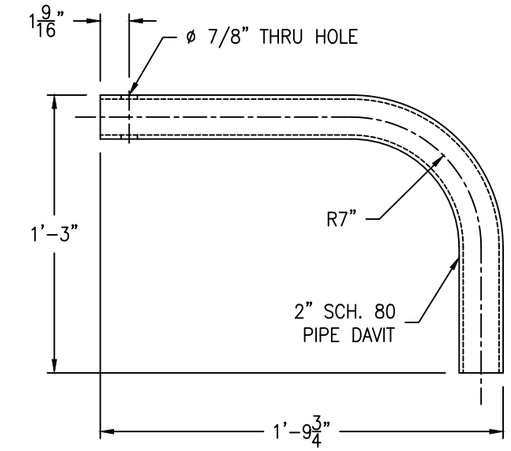

DAVIT ARM DETAIL

(1 REQ'D) SCALE: 2" = 1'-0"

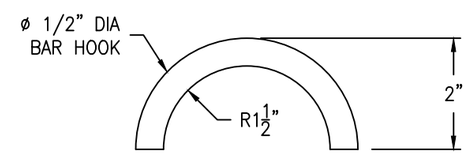

HOOK DETAIL

(1 REQ'D) SCALE: 6" = 1'-0"

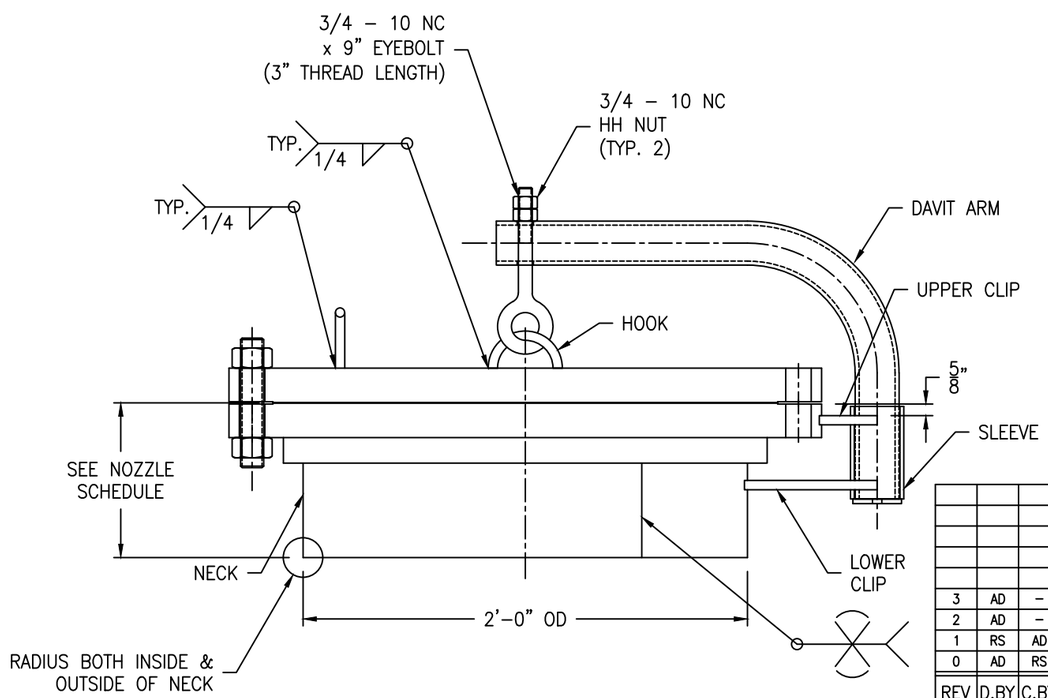

REV	D.BY	C.BY	DATE	DESCRIPTION
3	AD	–	5/14/25	AS BUILT
2	AD	–	4/22/24	CERTIFIED
1	RS	AD	3/12/24	APPROVAL REV 1
0	AD	RS	2/5/24	APPROVAL

1 REVISIONS

Savannah Tank & Equipment Corp.
1517 Telfair Road, Savannah, GA 31415
(912) 233-8902

DRAWN BY: AD
CHK'D BY: RS
APPROVED BY: NP
SCALE: 2" = 1'-0"

BAKELITE CHEMICALS LLC
AQUEOUS AMMONIA TANK
EQUIP. # S-19
CUST. PO #5522460061

DRAWING NO.:003-24-10 SHT 10 OF 11 | REV. SET 3

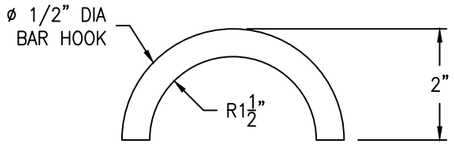

HOOK DETAIL

(1 REQ'D) SCALE: 6" = 1'-0"

FC-38

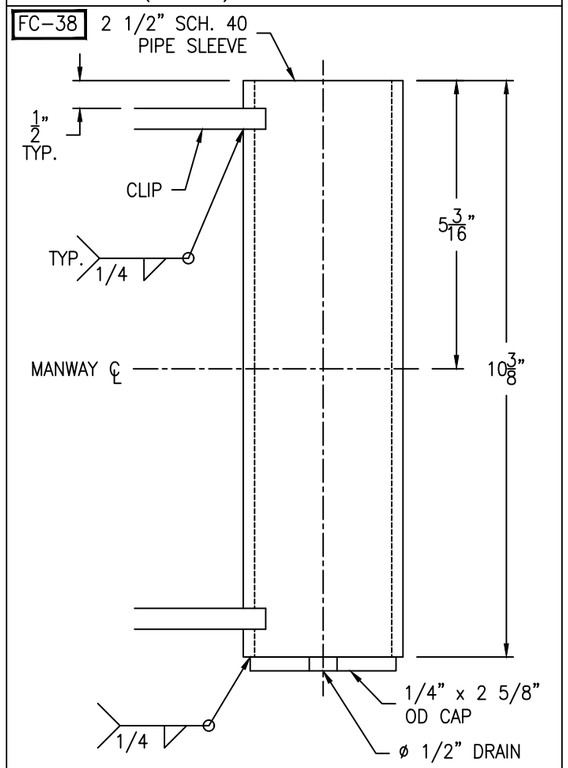

SLEEVE DETAIL

(1 REQ'D) SCALE: 6" = 1'-0"

FC-38

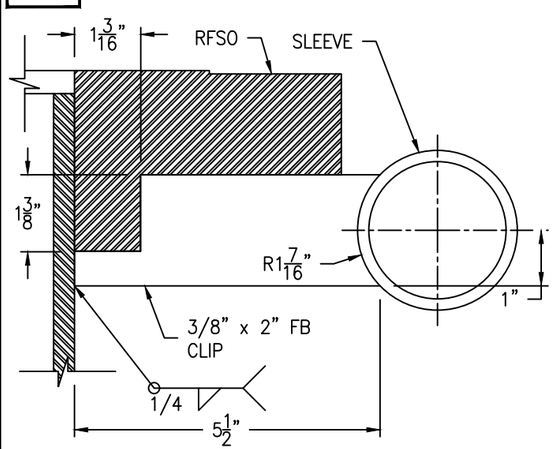

CLIP DETAIL

(2 REQ'D) SCALE: 6" = 1'-0"

FC-38

Bolting for blind
(20) 1 1/4-7 NC x 7" FULL THREADED STUD
(40) 1 1/4-7 NC HH NUT
(1) 24" 150# RING GASKET x 1/8" THK (NEOPRENE)

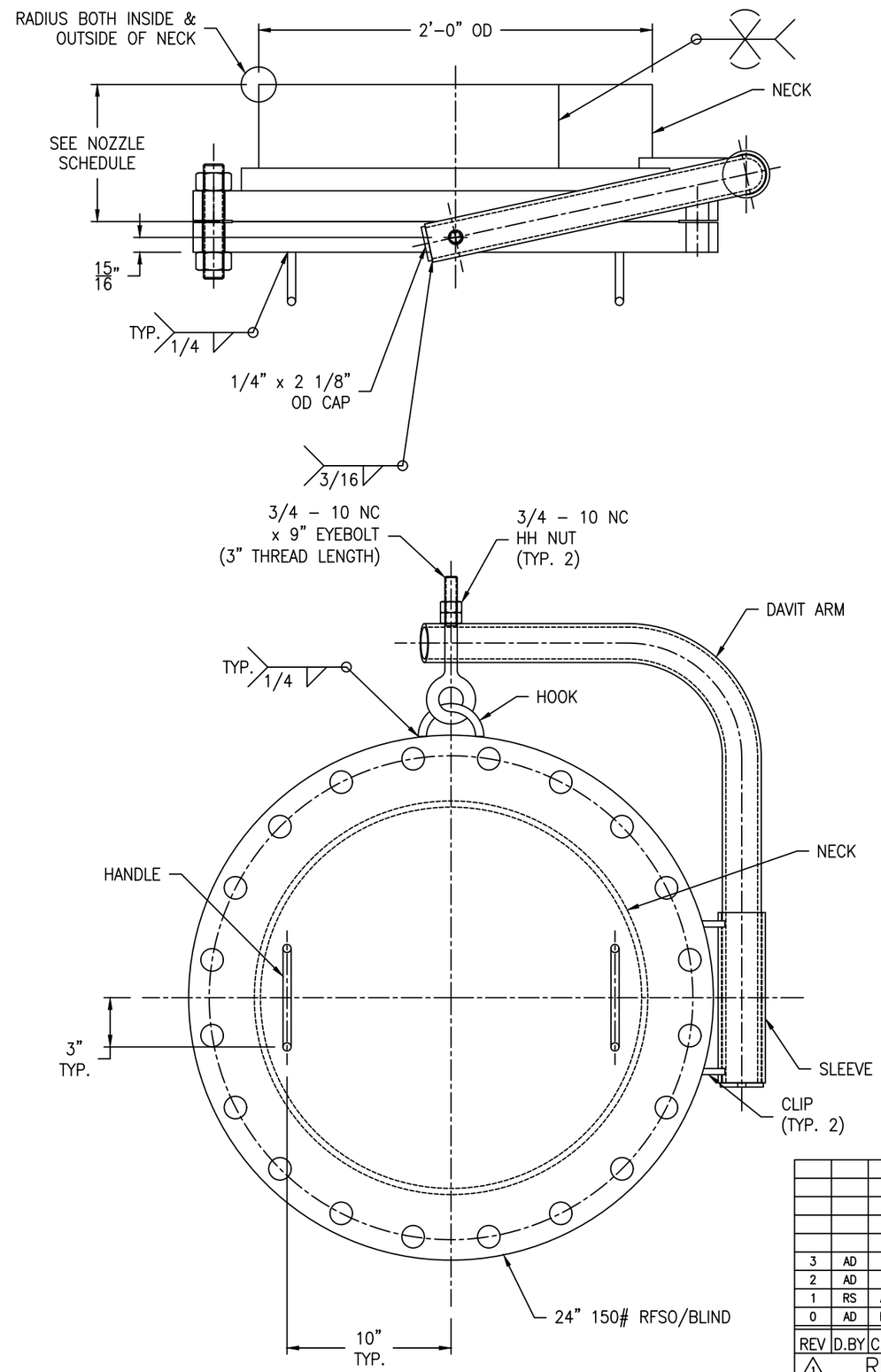

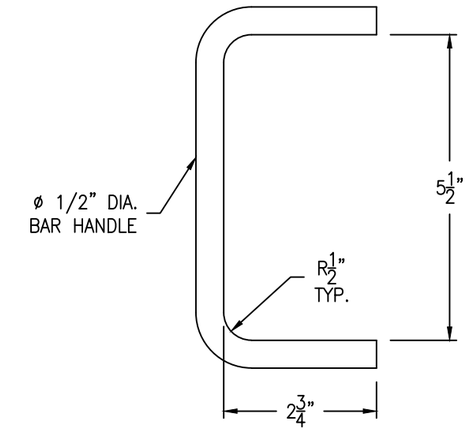

HANDLE DETAIL

(2 REQ'D) SCALE: 6" = 1'-0"

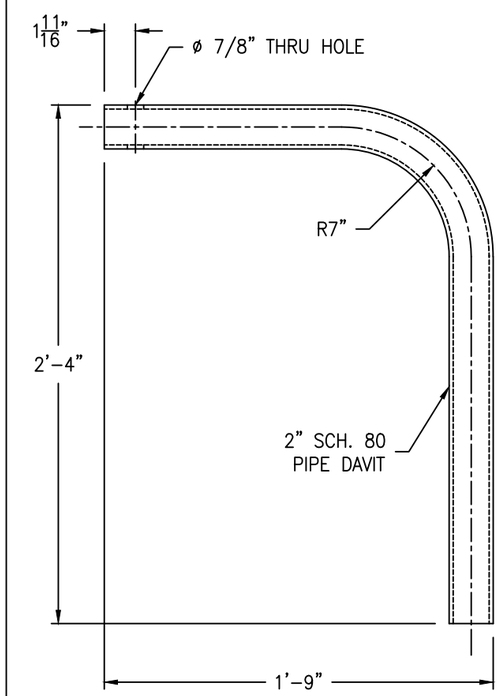

DAVIT ARM DETAIL

(1 REQ'D) SCALE: 2" = 1'-0"

REV	D.BY	C.BY	DATE	DESCRIPTION
3	AD	–	5/14/25	AS BUILT
2	AD	–	4/22/24	CERTIFIED
1	RS	AD	3/12/24	APPROVAL REV 1
0	AD	RS	2/5/24	APPROVAL

1 REVISIONS

Savannah Tank & Equipment Corp.
1517 Telfair Road, Savannah, GA 31415
(912) 233-8902

DRAWN BY: AD
CHK'D BY: RS
APPROVED BY: NP
SCALE: 2" = 1'-0"

BAKELITE CHEMICALS LLC
AQUEOUS AMMONIA TANK
EQUIP. # S-19
CUST. PO #5522460061

DRAWING NO.:003-24-11 SHT 11 OF 11 REV. SET 3